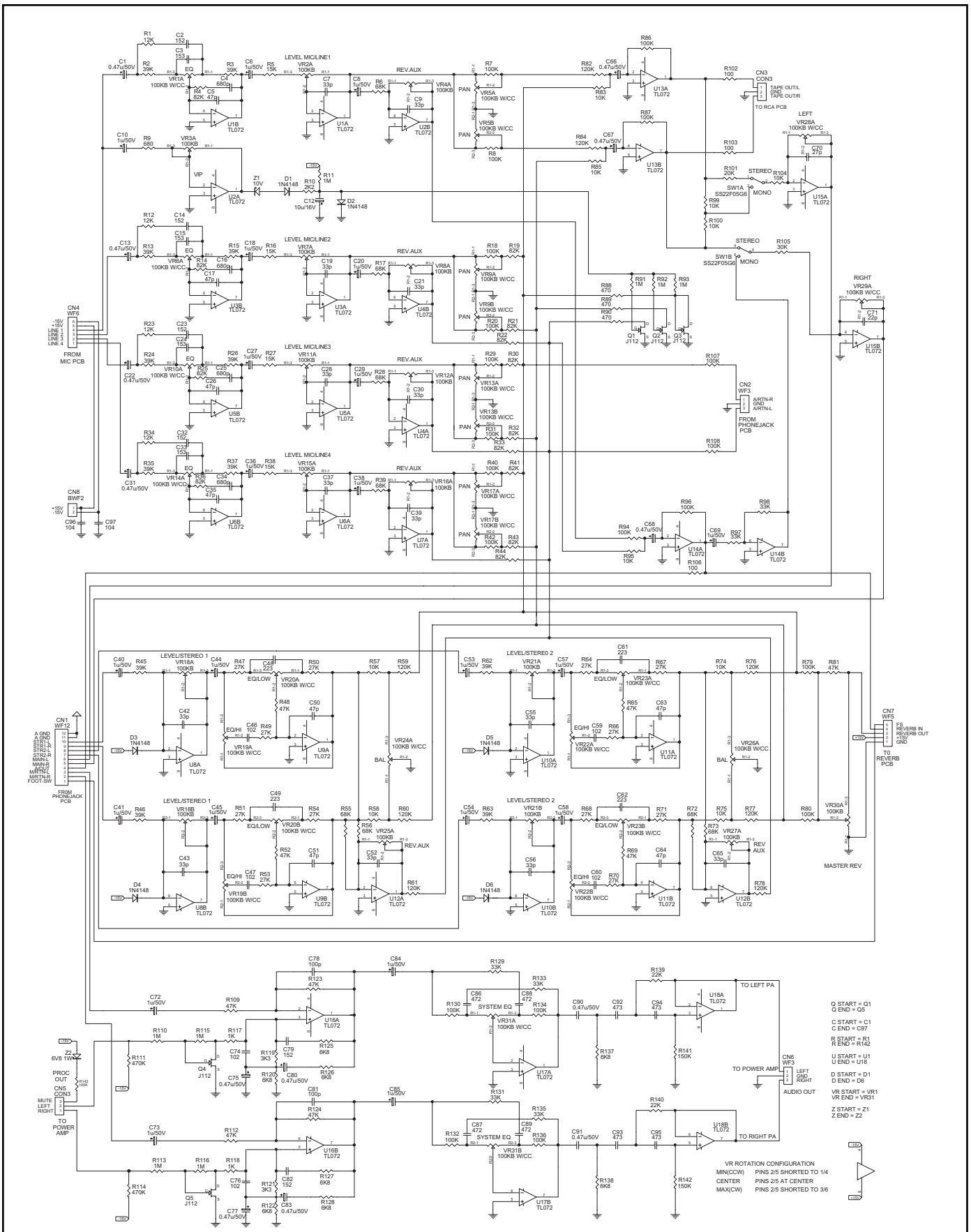

Fender **PASSPORT**

Mixer Schematic Diagram

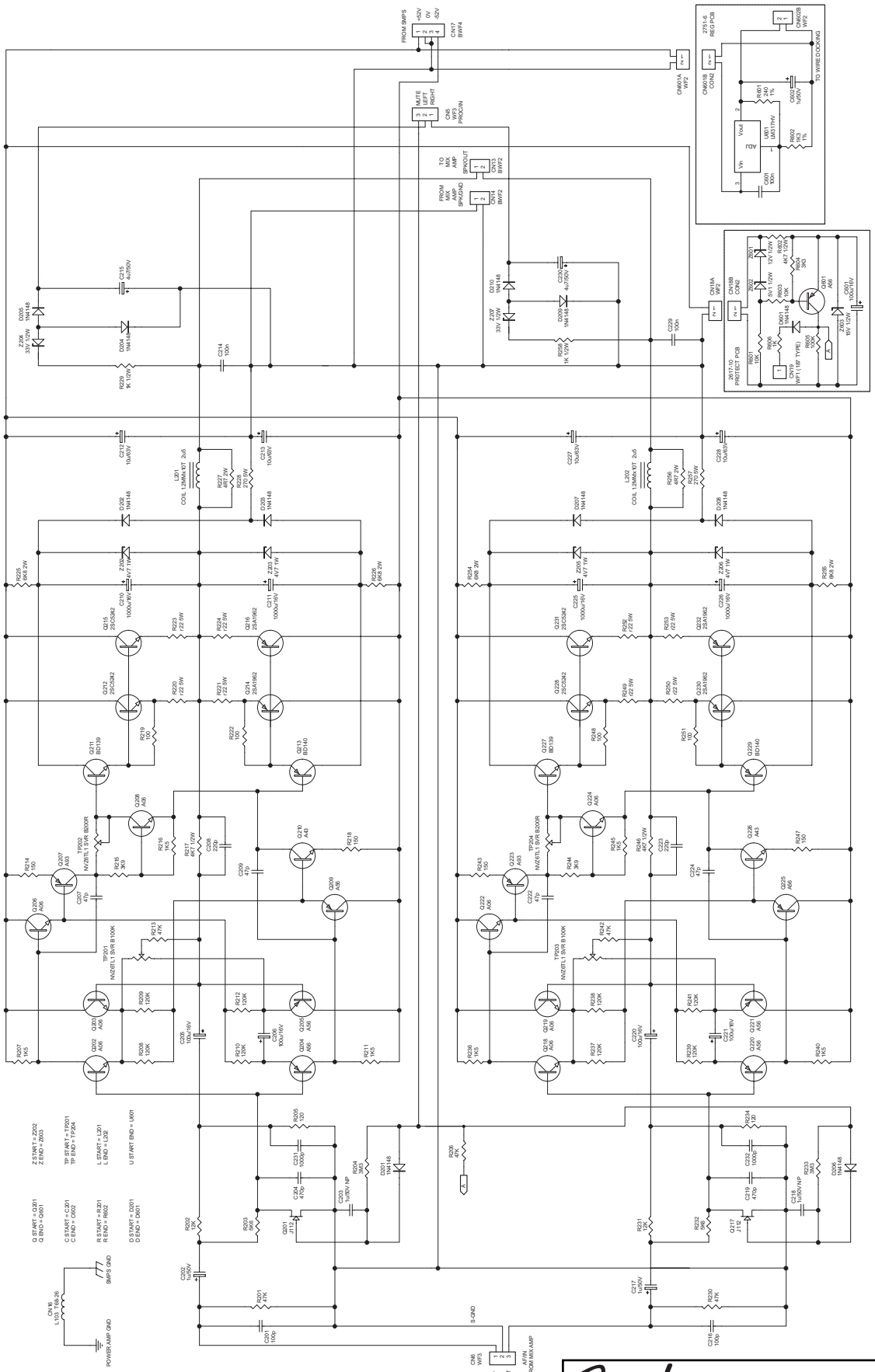

Fender **PASSPORT**

Pwr Amp Schematic Diagram